Single Phase Thyristor Regulator
JM series

PERFORMANCE SPECIFICATION
CHINO

Best for heater control
All-in-one type with built in setting display provised as standard.

JM is a single phase thyristor regulator that receives signal from controller, PLC and manual setting unit and regulates power provided to the electric furnace heater. 7 types of rated current are prepared from 10A to 500A so capacity according to the heater ratings can be selected.

FEATURES

●Ease of settings and checking operations
You can check the parameter settings and load status (voltage, current*1, power*1 and resistance value*1)

●Built in setting display unit and panel mounting types are provided
Thyristor model that matches with place of installation can be selected

●Improvement in safety features
(1) Load current is measured*1 and gate off alarm is output in case of over current is flown.
(2) Built in rapid fuse*2 protects from over current.*3
(3) The models with rated current of 200A or more monitor heat sink temperature and turns the gate off and output alarm in case of abnormal heating. Further, predicts failure by monitoring cooling fan rotations, and notifies to replace the fan before it breaks down.

●Heater disconnection alarm*1 *4
Output alarm when load resistance value goes above set disconnection rate. In case of Phase-angle firing, disconnection of 1 wire out of 7 wires, and in case of zero cross firing disconnection of 1 wire out of 5 wires can be detected.*5

●RS485 (MODBUS) communication function provided as standard
Integrated management of power monitoring, parameters and alarm detection by high order devices (like PC and PLC) is possible.

●International Standards*12
CE and RoHS Compliant

*1 Built in or external CT is required.
*2 Corresponds to the main circuit rated current 30A to 500A.
*3 For 10A and 20A external fuse (No Alarm) is required.
*4 Control input is less than 30%. In case of Silicon Carbide heater. Cannot be used in case of applicable to any of these.
*5 Heater should be of same material and same capacity.

MODELS

JM□□ □□□ □□□□3NN

Main circuit rated voltage
20 : 200V (200V/220V/240V)*6 *7
10 : 100V (100V/110V/120V)*6 *7
40 : 400V (380V/400V/440V)*6 *7
100V and 400V series requires additional step up / down transformer (accessories) for control power supply.

Main circuit rated current

010 : 10A	020 : 20A	030 : 30A
050 : 50A	075 : 75A	100 : 100A
150 : 150A	200 : 200A	250 : 250A
300 : 300A	400 : 400A	500 : 500A

Feedback type*8
V : Voltage feedback (Phase angle firing)
A : Current feedback (Phase angle firing)
W : Power feedback (Phase angle firing)

Rapid fuse
A : Built-in*2
N : None

Setting display unit / communication*9
3 : Built-in with communication *12
4 : Panel mounting, with communication

CT (current transformer)
0 : Mounted externally*10
1 : Built-in

Heater disconnection alarm / current limit
3 : Heater disconnection alarm + current limit*11

*6 Set by the setting display unit on the main unit (at the initial power on)
*7 Note that the control power supply voltage is 220V to 240V.
*8 Control system (Phase-angle firing / Zero-cross firing) and feedback type (only Phase-angle firing) are switchable on setting display unit on the main unit
*9 Cannot be changed after the Thyristor is delivered.
*10 Use the CT with rated current of 5A at secondary side, if necessary.
*11 CT is required for heater disconnection alarm / current limit. Functions only when using phase-angle firing.
*12 Items marked with ▭ does not conform to CE.

Main circuit rated voltage and control power supply

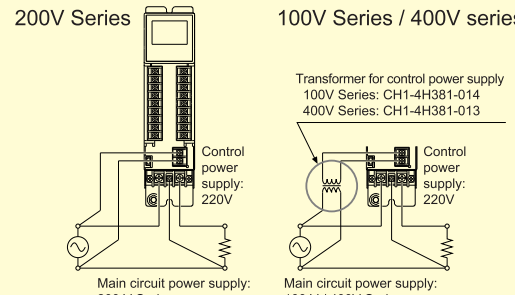

Control system and feedback system switchable

2 kinds of control system (phase-angle firing/ zero -cross firing) and 3 kinds of feedback system (voltage, power, current) are selectable / switchable depending on the control target.

Control system

●Phase-angle firing (when output is 50 percent)

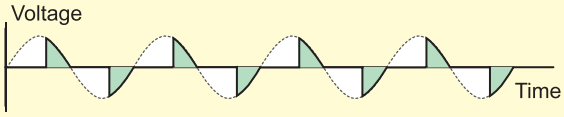

Control system in which output is done by changing control angle θ(ON timing) depending on each half cycle of power (180 degrees) .

●Zero-cross firing (when output is 50 percent)

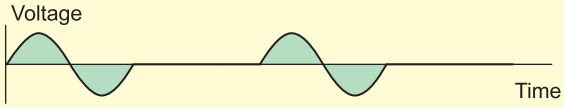

Control system that decides on / off for each cycle of power supply and outputs it. Corresponds to ni-chrome heater only.

Feedback method (phase-angle firing)

●Voltage feedback

For heating element which has small resistance change.

Nichrome heater

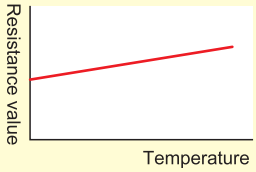

●Current feedback

For heating element with small electric resistance at low temperature and which changes up to 6 to 12 times at heating.

Molybdenum disilicide heater

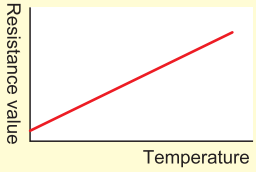

●Power feedback

For the heating elements for which electrical resistance changes from minus to plus when temperature increases or becomes 4 times more due to aging.

Ex. SiC heater

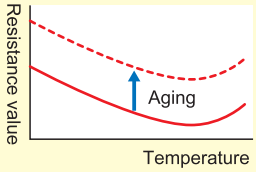

Ramp setting

It changes gradient of input / output characteristics and controls maximum output in the range of 0 to 100% even if input is 100%.

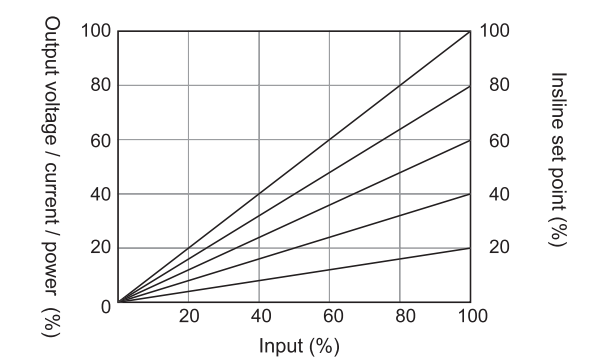

Elevation setting

Keeps the gradient of input / output characteristics as it is and output adding value that is set to it.

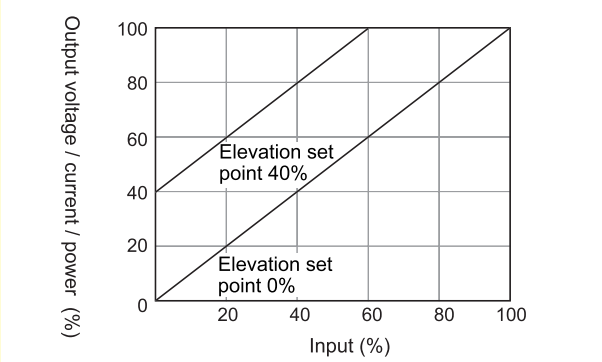

Soft start

Increases or decreases the output gradually up to specified value when power is turned ON or when there is sudden change in the input.
Time of output from 0% to 100% can be set freely from 0.1 to 20.0 sec.

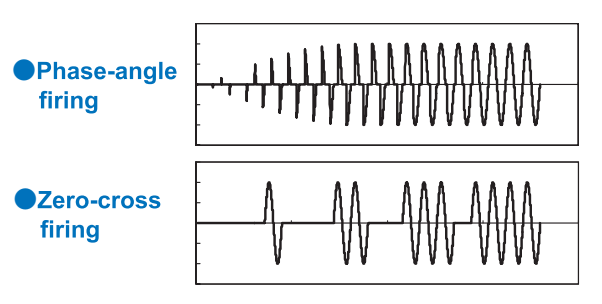

Current limit

Controls upper limit of output current (load current) at any value.

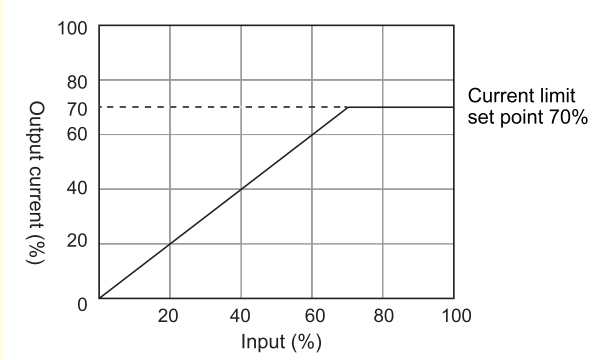

GENERAL SPECIFICATIONS

Phase: Single-phase

Control power supply

Rated voltage: 200 to 240V AC

Rated frequency: 50 / 60 Hz (±2Hz)

Power consumption

Rated current (A)	Power consumption (VA)	
	Setting display (Built-in)	Setting display (Panel mounting)
10 to 150	7	8
200 to 500	25	26

Main circuit power supply

Rated voltage: 100V (100/110/120V AC) *1 *2
200V (200/220/240V AC) *1 *2
400V (380/400/440V AC) *1 *2

Rated frequency: 50 / 60 Hz (automatic change)

Rated current: 10,20,30,50,75,100,150,200,250,300,400,500A (to be specified)

Measure for power failure: Setting are stored in non-volable memory. (Number of re-writes 1000000 times)

Insulation resistance

Between primary terminal and protective conductor terminals:
50MΩ or larger at 500VDC
Primary terminal:Control power terminal, V terminal, Main circuit terminal, alarm output terminal

Between secondary terminal and protective conductor terminals:
50MΩ or larger at 500VDC
Secondary terminal : Primary terminal, all terminals other than protective conductor terminal

Withstand voltage: Between primary terminal and protective conductor terminal
1 minute at 2000VAC (rated voltage 100 series / 200V series)
1 minute at 2500V AC (rated voltage 400V series)

Casing

Front: Fire resistant polycarbonate (UL94V-0)

Case: Steel sheet / Aluminum heat sink

Colour: Gray (Main body), Black (Power unit & Control unit)

Installation: Panel mount type

External dimentions:

10,20A	194(H)X48(W)X163(D)
30,50,75A	270(H)X60(W)X239(D)
100,150A	270(H)X120(W)X274(D)
200,250A	320(H)X120(W)X274(D)
300,400,500A	440(H)X120(W)X310(D)

Weight:

10,20A	Approx 0.9Kg
30,50,75A	Approx 2.4Kg
100,150A	Approx 4.5Kg
200,250A	Approx 6.0Kg
300,400,500A	Approx 10.5Kg

Terminal screw

Rated current (A)	Main circuit terminal	protective conductor terminal	V terminal
10,20	M4	M5	M3
30,50,75	M6	M6	M4
100,150	M8	M8	M4
200,250	M10	M8	M4
300,400	M12	M8	M4
500	M16	M8	M4

Others M3

Calorific value

Rated current (A)	Calorific value(W)	Rated current (A)	Rated voltage (V)	Calorific value(W)
10	16	300	100 / 200	379
20	33		400	395
30	40	400	100 / 200	526
50	71		400	542
75	116	500	100 / 200	669
100	136		400	692
150	214			
200	310			
250	397			

■INPUT SPECIFICATIONS

Input signal: 4 to 20mA, 0 to 10V DC,0 to 5V DC, 1 to 5V DC, Logic input (L:0.0V DC≤ input ≤1.5V DC, H: 4.0V DC ≤ input ≤ 10.0V DC)

Sampling rate: 10ms

Input resistance: Current input : 100Ω
Voltage input : 150kΩ

Allowable signal source resistance:
Voltage input : 100Ω or less

Allowable input: Current input : ± 40mA
Voltage input : ± 20V AC

■OUTPUT SPECIFICATIONS

Control type: Phase-angle firing /zero-cross firing

Feedback type: Voltage, current, power or no-feedback (switchable)

Output range: 0 to 98% of rated voltage

Output accuracy *3
No-feedback…within ±10% FS of rated voltage
Voltage feedback…
within ±3% FS of rated voltage
(At ±10% fluctuation of rated voltage)
Current feedback…
within ±3% FS of rated current
(At ±10% fluctuation of rated current and at 1 to 10 times variation of load resistance)
Power feedback…
within ±3% FS of rated voltage
(At ±10% fluctuation of rated current and at 1 to 3 times variation of load resistance)
Accuracy to be considered under reference operation conditions, and in the 10 to 90% range of rated voltage (at the time of voltage feedback specifications) / rated current (at the time of current feedback specifications) / rated power (at the time of power feedback specifications). CT error is not included. Display value is not in the scope of accuracy guarantee.

Resistance load: SiC, Nichrome, Iron chrome, Molybden disilicide, Platium, Tangusuten, Molybden etc.

Inductive load: Transformer load (Applicable for phase-angle firing and primary control. Magnetic flux density below1.2T is recommended).

Allowable voltage fluctuation range:
±10% of rated voltage

■ALARM FUNCTION

Alarm types

Alarm output	Alarm types	Operation
AL1	Over current Blown rapid fuse Abnormal frequency Operation failure Heat sink excessive temperature rise (Above rated current 200A)	Operation Stop
AL2	Power supply failure Heater disconnection Loop failure Cooling fan failure	Operation continue

■ALARM OUTPUT

Output points: Mechanical relay 2 points

Output capacity (Mechanical relay output)

Contact type: 1a common

Contact capacity:

Resistance load	240V AC 1A
	30V DC 1A
Inductive load	240V AC 1A
	30V DC 1A
Smallest load	5V DC 10mA

■EXTERNAL SIGNAL INPUT (DI)

Input points: 2 points

Input signal: Non-voltage contact

External contact capacity:
5V DC 2mA

Function: Switching of start / stop, auto / manual, phase-angle / zero-cross

*1 Set by the setting display unit on the main unit (at initial power on)
*2 Note that the control power supply voltage is 220 V
*3 Accuracy in reference operating conditions and within the rated range of 10 to 90%.

EXTERNAL SETTING INPUT (AI)

Input point: 2 points
External variable resistance:
10KΩ recommended (within 2 to 20 KΩ)
Function: Ramp,current limit,elevation,manual output,soft-start

CT

External CT : 5A output for full scale of thyristor rated current model

SUPPORTING FUNCTION

Ramp: 0 to 100% of output range
Elevation: 0 to 100% of output range
Soft-start: 0.1 to 20.0 seconds
Current limit: 0 to 100% of output range

PROTECTIVE FUNCTION

Over current: Operation stops at 120% or over of rated current
Instantaneous power failure detection:
Voltage reduction of control power supply (about 70% or lower of rated voltage)

COMMUNICATION INTERFACE

Type: RS485
Protocol MODBUS-RTU,MODBUS-ASCII
Function: High order communication
Communication spcification

Item		RTU mode	ASCII mode
Communication method		Half-duplex start-stop synchronization method	
Communication speed		9600,19200 bps	
Transmisson code		Binary	ASCII
Error check	Vertical direction	Parity	
	Horizontal direction	CRC-16	LRC
Character constitution	Start bit	1 bit	
	Data longeth	8 bit	7 bit / 8 bit
	Pariti bit	Non / Even number / Odd Number	Non*/ Even number / Odd Number
	Stop bit	1 bit / 2 bit	

* Not supported when data length is 7 bit (No parity bit)

REFERENCE OPERATING CONDITIONS

Ambient temperature: 23°C ± 2°C
Ambient humidity: 55%RH ± 5% (no condensation)
Power voltage: 220 VAC ± 1%
Main circuit power supply and voltage:
Rated voltage ± 1%
Power supply frequency: 50 / 60Hz ± 1Hz
Mounting angle: Forward and backward --- within ± 1°
Lateral --- within ± 1°
Altitude: 1000m or less
Vibration: 0m/s²
Shock: 0m/s²
Installation condition: Single panel mounting
Necessary space: Top and bottom more than 200mm, left and right 25mm (10 to 250A) or 33mm (300 to 500A),
Wind: None
External noise: None
Warm up time: At least 30 minutes

NORMAL OPERATING CONDITIONS

Ambient temperature: -10°C to 50°C (50°C to 55°C in case rated current are 90%)
Ambient humidity: 20 to 90%RH (no condensation)
Power voltage: 200 to 240VAC
Main circuit power supply and voltage:
Rated voltage ± 10%
Power supply frequency: 50 / 60Hz ±2Hz
Mounting angle: With vertical direction, within ± 2° in forward and backward, within ± 2° in lateral
Installation height: 1000m or below
Vibration: 0m/s²
Shock: 0m/s²
Installation condition: Single panel mounting
Necessary space: Top and bottom more than 200mm, left and right 25 mm (10 to 250A) or 33mm (300 to 500A)
External noise: None
Rate of change of tempareture:
Less than 10°C / hour

TRANSPORT CONDITIONS

Ambient temperature:
-20 to 60°C
Ambient humidity: 5 to 95%RH (no condensation)
Vibration: 4.9m/s² or less (10 to 60Hz)
Shock: 392m/s² or less
(under factory packing condition)

STORAGE CONDITIONS

Ambient temperature:
20 to 60°C
*10 to 30°C for long-term storage
Ambient humidity: 5 to 95%RH (no condensation)
Vibration: 0m/s²
Shock: 0m/s² (under factory packing condition)

SETTING DISPLAY (Panel mount type)

Installation: Panel mount type
Between main body and setting display are exclusive cable SH-JMK3(3m), SH-JMK5(5m), SH-JMK8(8m)
Power supply: supply from main body
Ambient temperature:
-10 to 55°C
Ambient humidity: 20 to 90%RH (no condensation)
Weight: 50 g

INTERNATIONAL STANDARD

CE marking: Make sure to use specified filter to comply with low voltage directive and EMC directive.
Low Voltage dirctive: EN60947-4-3 (For4)Pollution degree 2
EMC dierctive: EN60947-4-3 (For4)
EMC test standard

Emission standard: according to EN60947-4-3 below

Emission type	Test standard
Conducted interference	CISP11 Class A Groupe 2
Radiation electromagnetic field	CISP11 Class A

Immunity standard : according to EN60947-4-3 below

Test type	Test standard
Electrostatic discharge	EN61000-4-2
Radio frequency radiation electromagnetic field	EN61000-4-3
First transient / Burst	EN61000-4-4
Surge	EN61000-4-5
Conducted disturbances induced by radio- frequency	EN61000-4-6
Voltage dip	EN61000-4-11

Rated voltage 200 to 500A and setting display unit (panel mounting type) do not comply with CE marking.

This product is a target device for harmonic control measures guidelines that receive high voltage or extra high voltage. (Harmonic generator).

Circuit classification : 7
Circuit type : 71 AC power regulator (Resistance load)
Conversion factor : 1.6

■EXTERNAL DIMENSIONS

●10、20A

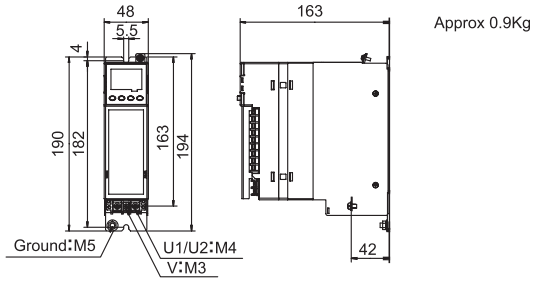

●30、50、75A

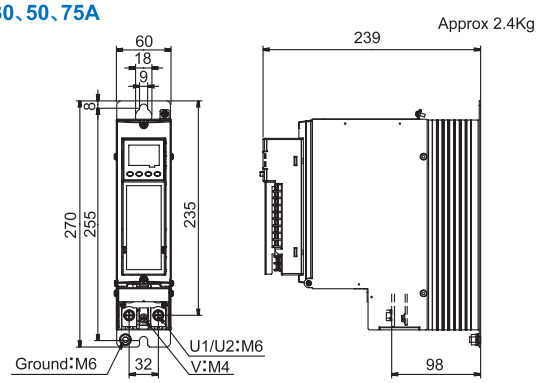

●100、150A

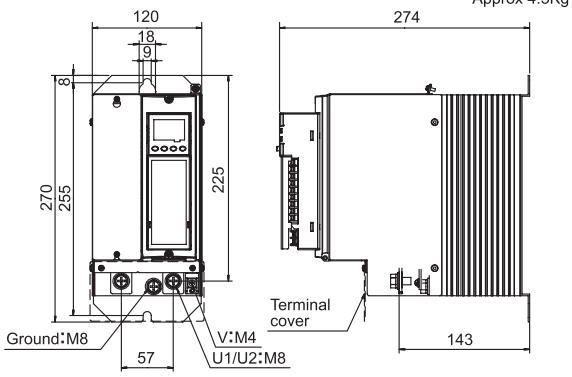

●200、250A

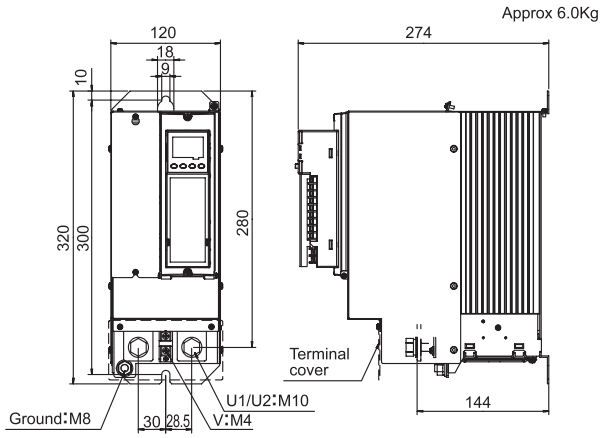

●300、400、500A

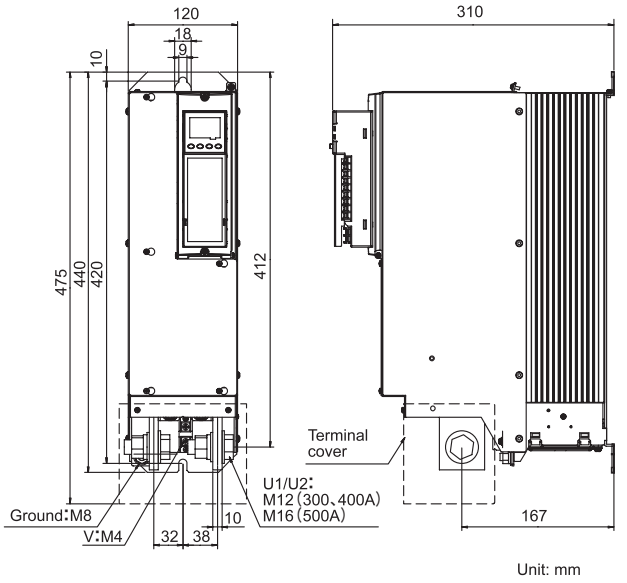

●PANEL CUT OUT

●10、20A

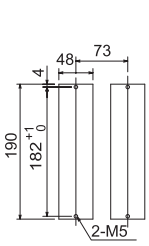

●30、50、75A

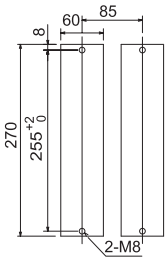

●100、150A

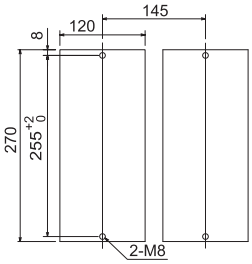

●200、250A

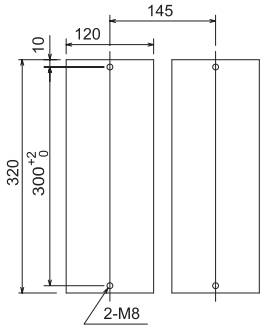

●300、400、500A

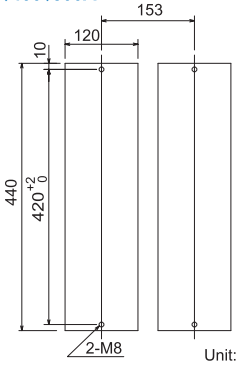

Unit: mm

■SETTING DISPLAY

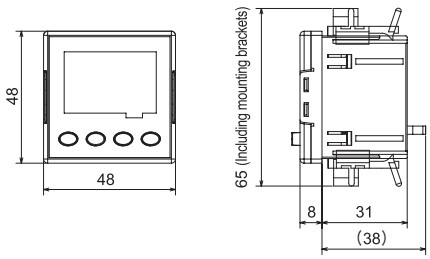

●PANEL CUT OUT

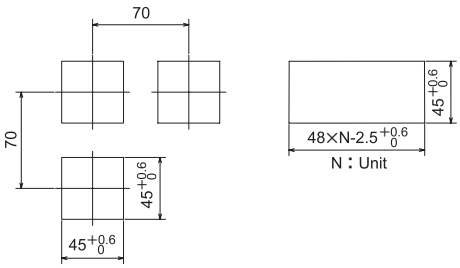

Unit: mm

■NAMES AND FUNCTIONS OF PARTS

●10、20A

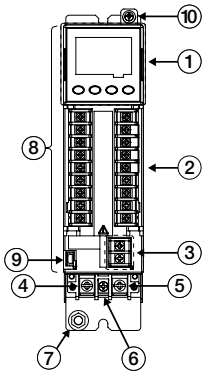

●100、150A

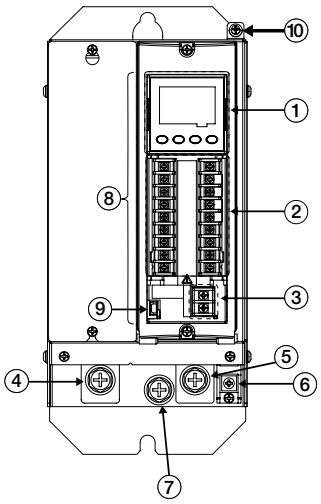

●300、400、500A

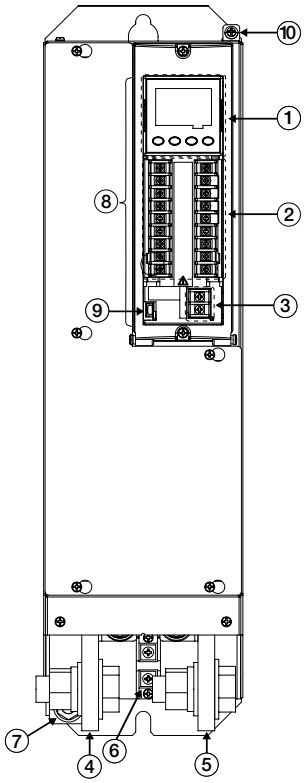

①Setting display unit
②Setting terminal
③Control power terminal
④Main circuit terminal (U1:Power supply side)
⑤Main circuit terminal (U2:Load side)
⑥Feedback terminal (V terminal)
⑦Protective conductor (ground)terminal
⑧Power supply / control unit
⑨**Engineering** port *Maintenance use only(Cannot be used)
⑩Shield connection terminal *For panel mounting setting display unit

●30、50、75A

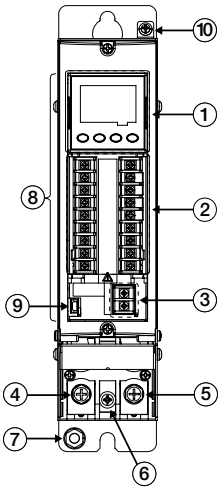

●200、250A

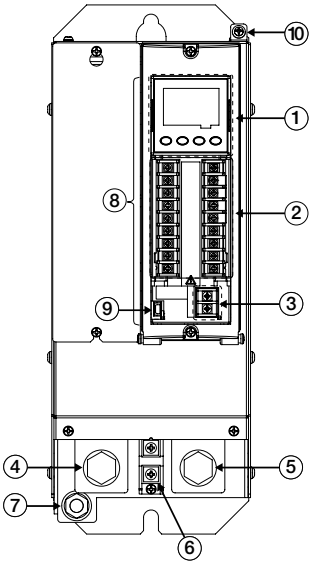

■NAMES AND FUNCTIONS OF SETTING DISPLAY UNIT

●Main body

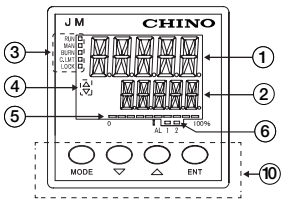

●Panel mounting type

Setting display unit

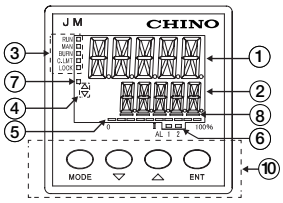

Main body

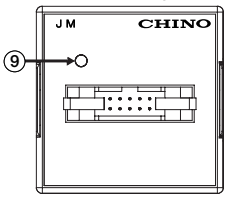

Setting display unit

Main body

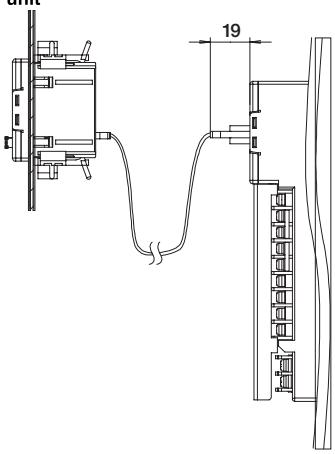

①DISP1
②DISP2
③Status lamp
④Elevation / lamp display
⑤Analog bar indication display
⑥Alarm output indication display
⑦Busy lamp
⑧Communication error lamp
⑨Power lamp
⑩Operation keys

■CONNECTION OF POWER SUPPLY, SETTING INPUT AND COMMUNICATION

*To prevent the risk of getting electric shock, make sure to turn OFF the power supply before doing wiring.

●Control power supply terminal

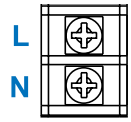

It is necessary to match main circuit power supply and the phase.
Step-up transformer is required if main circuit rated voltage is 100V line.
Step-down transformer is required if main circuit rated voltage is 400V line.

●Main circuit terminal

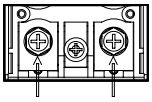

Position of main circuit terminals differs depending on the rated current.
Refer to P6 'Names and functions of parts.'

U1 terminal power supply side
U2 terminal load sode

●Protection conductor (grounding) terminal

Make sure to connect protective conductor (ground) terminal of the instrument to the protective conductor (ground) terminal of power supply facility.
Position of protective conductor (ground) terminal differs depending on the rated current.
Put crimp type terminal with insulation sleeves to the ground cable first and then connect.
Refer to P6 'Names and functions of parts.

●Feedback terminal

Location of feedback terminal varies depending on rated current of the instrument.
Refer to P6 'Names and Functions of Parts'.
For wiring of the feedback terminal, put crimp type terminal as shown below.

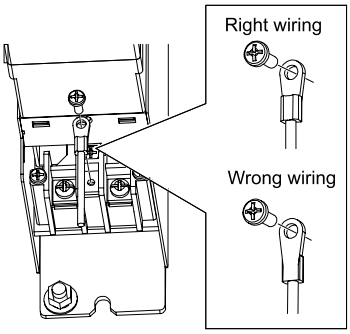

●Connection of communication interface

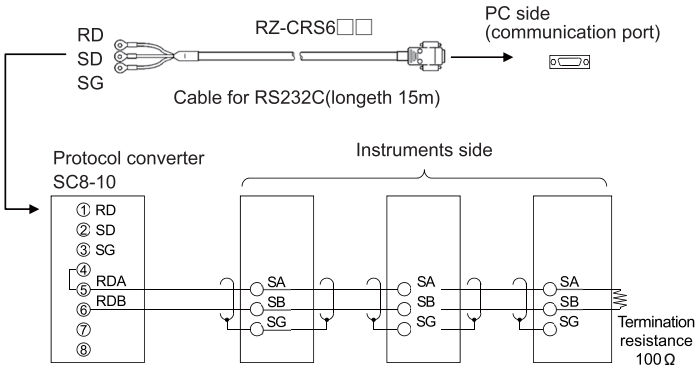

Set to RS485 using selector switch.

Please do not connect the SG line to the FG terminal of the instrument or a grounding terminal.

■CONNECTION OF SETTING INPUT TERMINALS

●DC voltage / DC current / Logic input terminal

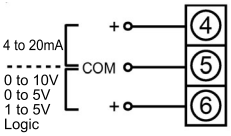

Input range	Allowable input voltage
Voltage / logic input	±20VDC
Current input	±20mA or ±4VDC

●External signal input (DI) terminal

Wiring to relay and switch

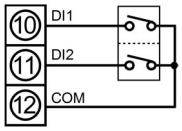

Wiring to open collector output

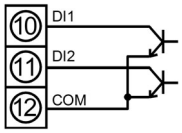

*At the purchase, short-circuit bar is placed between DI2 and COM (between ⑪-⑫ terminals) .
Take it out if using external signal input (DI).

●External signal input (AI) terminal

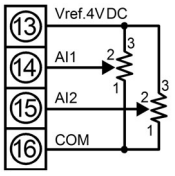

*At the purchase, short-circuit bar is placed between Vref.4V and AI1 (between ⑬-⑭ terminals) .
Take it out if using external setting input (AI).
*Use 10kΩ for external variable resistor.

●External current transformer (CT) terminal

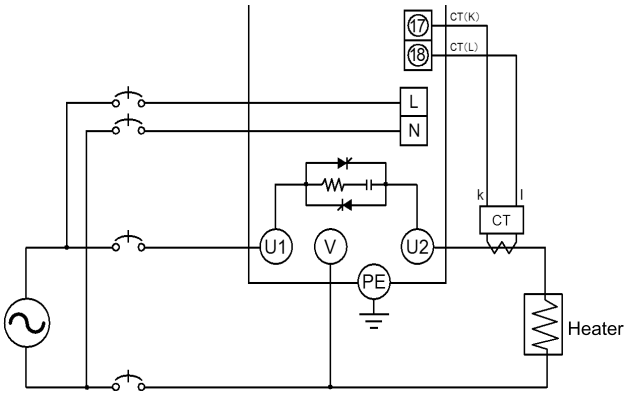

CT specification : 5A output to rated current full scale.

●Wiring of alarm output terminals

*In order to prevent electric shocks, shut down the power supply and buffer relay power supply before wiring.
*Connect cables via buffer relay if the load capacity exceeds the built in relay capacity of the instrument.

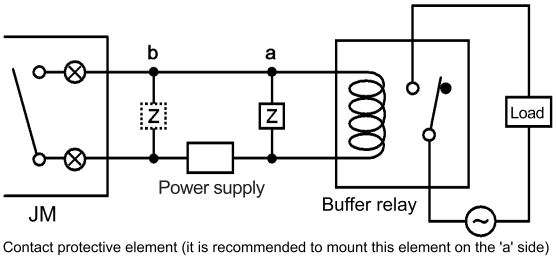

Z: Contact protective element (it is recommended to mount this element on the 'a' side)

●Alarm relay output (2 points 'a' contact)

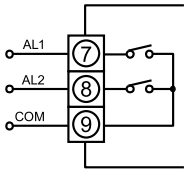

AL1	①Over current ②Blown rapid fuse ③Abnormal frequency ④Operation failure ⑤Heat sink excessive temperature rise
AL2	①Power supply failure ②Heater disconnection ③Loop failure ④Cooling fan failure

Basic wiring

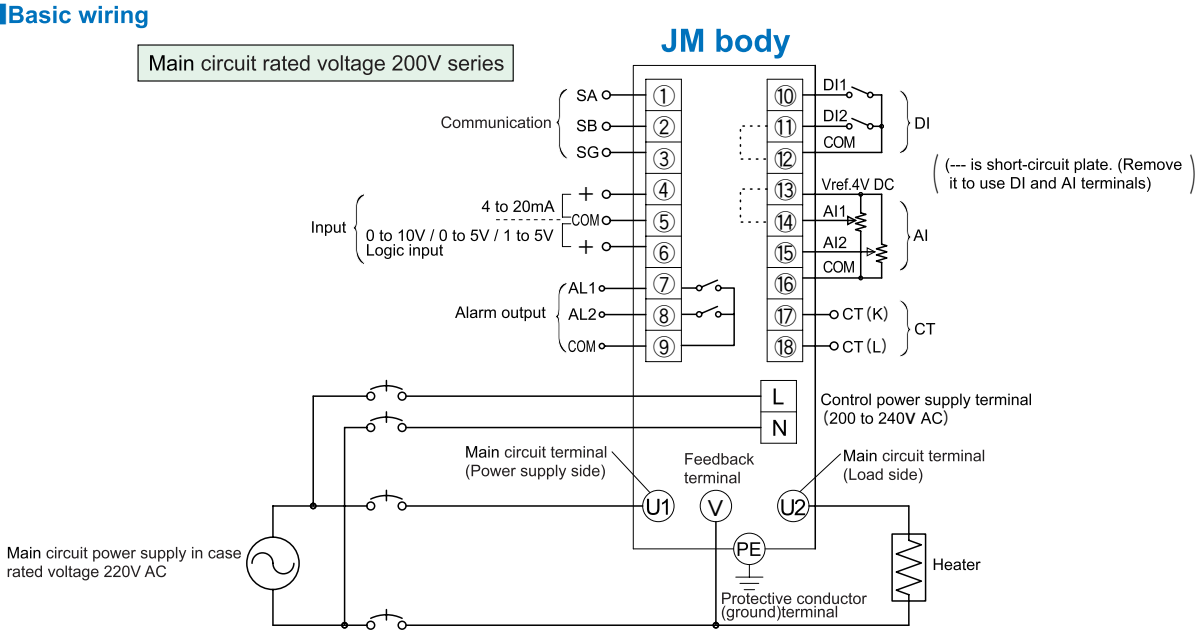

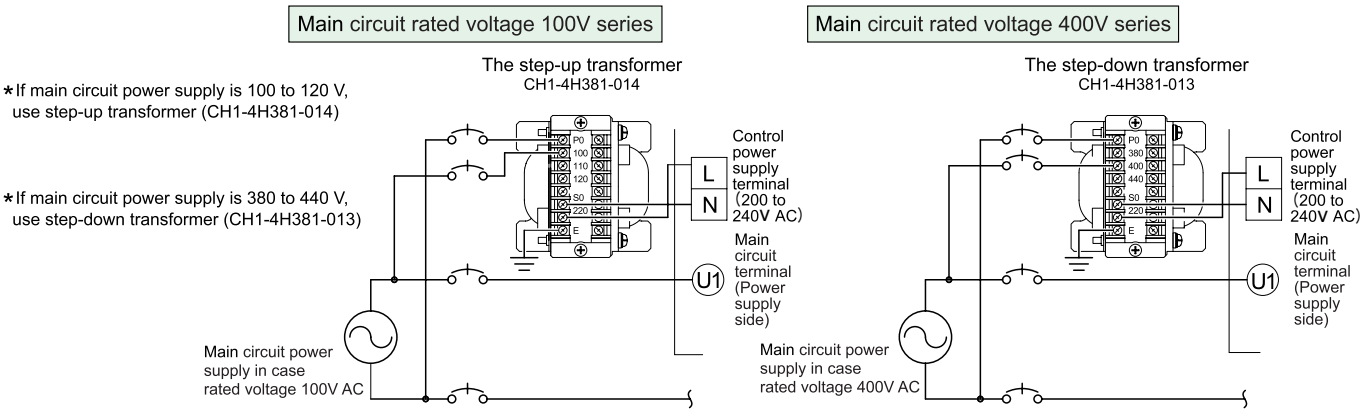

Types of terminals and terminal process

For control power terminals, use type O terminals without fail to ensure safety. It is recommended to use O type terminals for other terminals also as far as possible.

Terminal base	Screw diameter	Tightening torque (Unit : mm)
Main circuit terminal (500A)	M16	O-type t:4 or more; 50.5 or less; 17 or more; with insulation sleeve
Main circuit terminal (300A, 400A)	M12	O-type t:4 or more; 50.5 or less; 13 or more; with insulation sleeve
Main circuit terminal (200A, 250A)	M10	O-type t:3 or more; 36 or less; 10.5 or more; with insulation sleeve
Main circuit terminal (100A, 150A) Protective conductor terminal (100A to 500A)	M8	O-type t:2 or more; 22 or less; 8.4 or more; with insulation sleeve
Main circuit terminal Protective conductor (ground)terminal (30A, 50A, 75A)	M6	O-type t:1.8 or more; 16.5 or less; 6.4 or more; with insulation sleeve

Terminal base	Screw diameter	Tightening torque (Unit : mm)
Protective conductor terminal (10A, 20A)	M5	O-type t:1.2 or more; 12 or less; 5.3 or more; with insulation sleeve
Main circuit terminal (10A, 20A) Feedback terminal (30 to 500A)	M4	O-type t:0.8 or more; 10 or less; 4.3 or more; with insulation sleeve
Control power supply terminal Alarm output terminal Setting input terminal Communication terminal Feedback terminal (10A, 20A)	M3	O-type 5.6 or more* t:0.8 or more; 6 or less; 3.2 or more; with insulation sleeve; Y-type 6 or less; 3.2 or more

*To fasten two terminal together, use type O terminal 5.6 mm or more.

■Wiring of CE marking conformity

It complies with CE marking by connecting to a specific noise filter.
This is applicable if rated current of the instrument is 10 to 150A.

Main circuit rated voltage 200V series

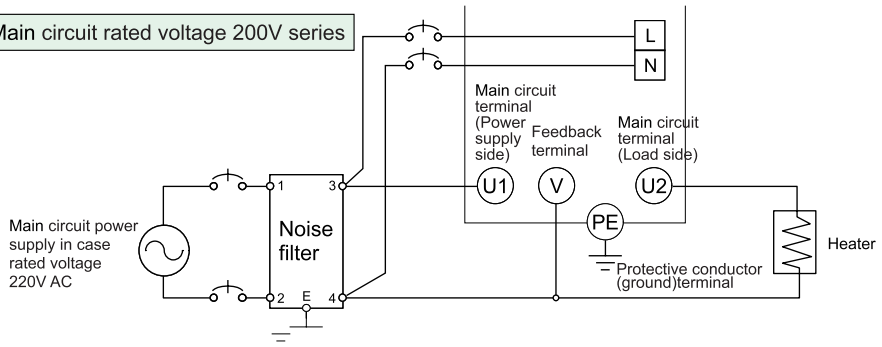

Main circuit rated voltage 100V series

*If main circuit power supply is 100 to 120 V, use step-up transformer (CH1-4H381-014)

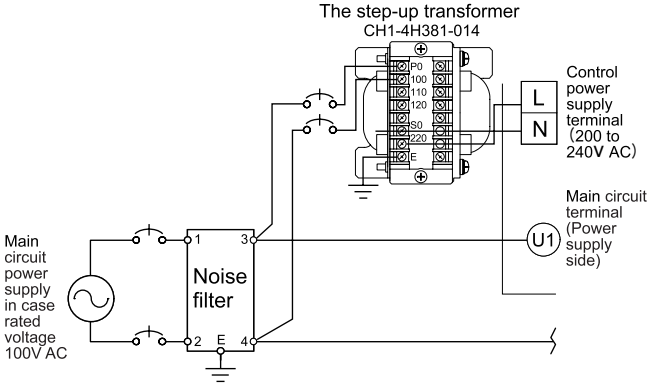

Main circuit rated voltage 400V series

*If main circuit power supply is 380 to 440 V, use step-down transformer (CH1-4H381-013)

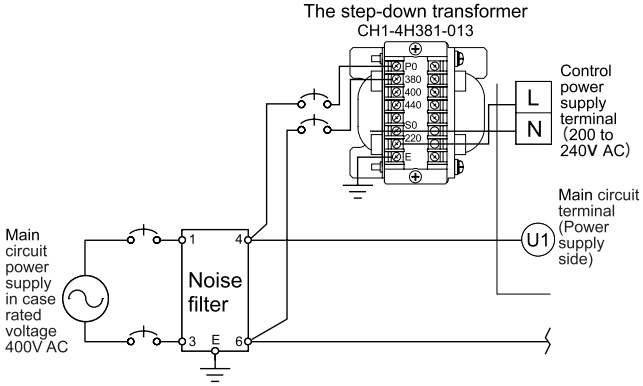

●Noise filter (Please arrange by yourself.)

Main circuit power supply voltage (V)	Rated current (A)	Models
100 to 240	10	HF2010A—UP
	20	HF2020A—UP
	30	HF2030A—UP
	50	HF2050A—UP
	75	HF2075A—UP
	100	HF2100A—UP
	150	HF2150A—UP

Main circuit power supply voltage (V)	Rated current (A)	Models
380 to 440	10	NF3010C—SVB
	20	NF3020C—SVB
	30	NF3030C—SVB
	50	NF3050C—SVB
	75	NF3075C—SVB
	100	NF3100C—SVB
	150	NF3150C—SVB

Noise filters are manufactured by SOSHIN ELECTRIC CO.,LTD

ACCESSORIES

●External setting unit (VL-JAL)

Model	Purpose of use	Specifications
VL-JAL	Ramp setting, current limit, elevation, manual output, soft start.	Variable resistance 10 kΩ

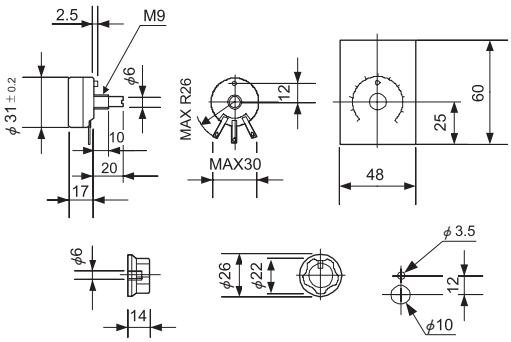

Unit : mm

●Exclusive cable for connected between main body and setting display (Corresponds to panel installation specs)

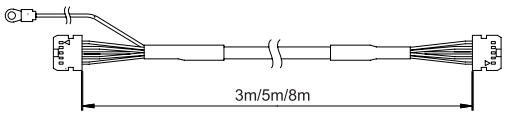

Longeth (m)	Models
3	SH-JMK3
5	SH-JMK5
8	SH-JMK8

●Cooling fan unit SH-JMFAN

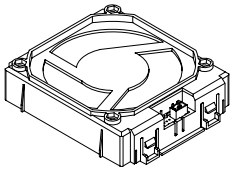

●Rapid fuse

Rated current (A)		Models
10		660CF-20ULTC*
20		660CF-30ULTC*
30		660GH-50SULTC
50		660GH-80SULTC
75		660GH-100SULTC
100		660GH-160SULTC
150		660GH-200SULTC
200		660GH-315S
250		660GH-350S
300	100 / 200V	250GH-450S
	400V	660GH-450S
400	100 / 200V	250GHW630S
	400V	660GH-630S
500	100 / 200V	250GHW710S
	400V	660GH-710S

*This rapid fuse is for external attachment. Fuse holder is required separately. Alarm is not activated for blown fuse.

●External fuse unit

Fuse holder (HK1038UL) / Fuse holder cover (HC-10)

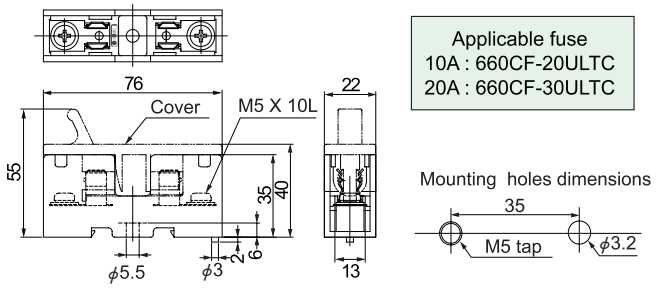

Unit : mm

●CT (Current transformer)

Rated current (A)	Models	Number of turns	TYPE
10	CW-5L-100/5A	10	TYPE1
20	CW-5L-100/5A	5	
30	CW-5L-150/5A	5	
50	CW-5L-100/5A	2	
75	CW-5L-150/5A	2	
100	CW-5L-100/5A	1	
150	CW-5L-150/5A	1	
200	CW-5L-200/5A	1	
250	CW-5L-250/5A	1	TYPE2
300	CW-5L-300/5A	1	
400	CW-5L-400/5A	1	
500	CW-5L-500/5A	1	TYPE3

●TYPE 1

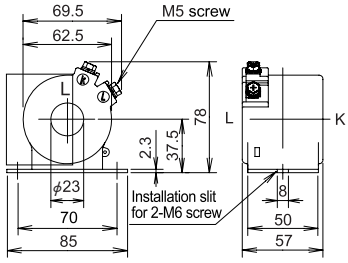

●TYPE 2

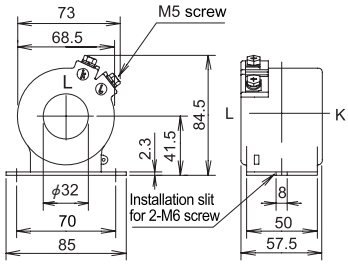

●TYPE 3

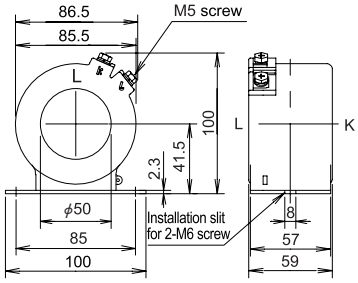

Unit : mm

●Transformer for control power supply

The step-up transformer
CH1-4H381-014
Main circuit rated voltage 100V series

Capacity 50VA
Weight approx 1.8kg

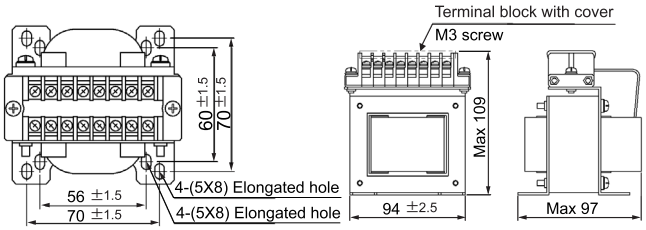

The step-down transformer
CH1-4H381-013
Main circuit rated voltage 400V series

Capacity 50VA
Weight approx 2.2kg

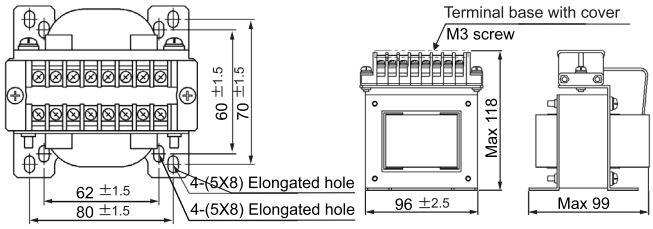

Unit : mm

Specifications subject to change without notice. Printed in Japan (I) 2020. 7

CHINO CORPORATION
32-8 KUMANO-CHO,ITABASHI-KU,TOKYO 173-8632
Telephone : +81-3-3956-2171
Facsimile : +81-3-3956-0915
E-mail : inter@chino.co.jp
Website : www.chino.co.jp/